PUMP CATALOG

PERFECTLY ADAPTED FLUID METERING PUMPS

Z-AXIS

INTEGRITY THROUGH INNOVATION

PRODUCTS AND SERVICES FOR FACTORY AUTOMATION

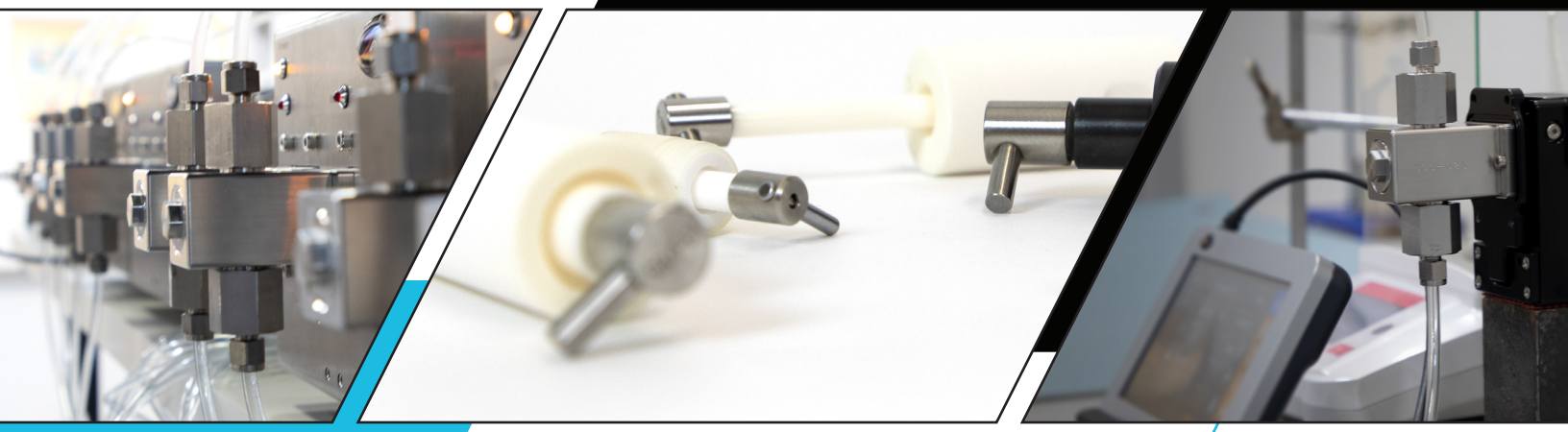

PATENTED ELECTRONIC ADJUSTMENT PUMP

PATENT NO. US 7,708,535 B2

CONTENTS

3 - About Zaxis
4 - Engineering
7 - Configuration Table
9 - Configuration Form
11 - Products
12 - Pump Heads
21 - Pump Drives
26 - Accessories
34 - Service & Support
36 - Warranty
37 - Terms & Conditions

CONTACT ZAXIS

2442 South 2570 West,
Salt Lake City, Utah 84119
(801) 264-1000
zaxisinc.com
sales@zaxisinc.com

Z-AXIS

About Zaxis

Located in the heart of Salt Lake City, Utah we have maintained a culture of innovation and success. Still a privately-owned company, we continue to engineer the world's finest leak testing and precision pumping technologies used by Fortune 500 companies around the world. We are excited about our growth and the amazing people who have helped us along the way. Stay tuned to Zaxisinc.com to be the first to know what new technologies we are developing.

We came from humble beginnings. We were literally working out of a garage, but our little garage company has grown into an industry leader. That small company heritage is something we take pride in. We try to act as small as we can when it comes to our customers. We're not interested in the sell-and-forget business. We want to deliver precision products to exceptional customers and build lasting relationships.

Since our humble beginnings, we have come a long way. In the fall of 2014, we expanded into a 20,000+ SQFT facility to manage our future growth. We are excited to innovate new technologies with the growing Zaxis force and we look forward to meeting you soon. We hope that you find all of your solutions here with us and if not, we hope to provide them for you in the near future.

Engineering

Patented Design

Patent No. US 7,708,525 B2

The patented eVmP system is a precision metering and fluid dispenser combined with a detachable Touch Screen Interface (TSi) for simple programing and immediate teach and control. This pump technology combines precision ceramic pump components and an electronically controlled linear stepper actuator to make ultra-fine adjustments to angle position, thereby changing the volume of metered liquid. This allows the eVmP system to provide dynamic fluid displacement to overcome variations in viscosity and surface tension.

Patented Technology

Figure 1

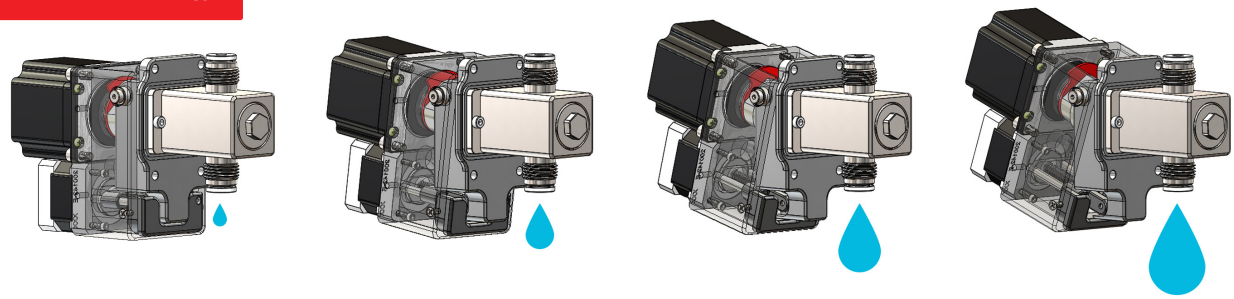

Electronic Volume Adjustment

As seen in *Figure 1* above, the pump head is attached to the pump drive via a hinged mounting plate. The electronically controlled linear stepper actuator adjusts the angle of the hinged mounting plate which will shorten or lengthen the travel of the pump head piston. The longer the travel, the more fluid that can be drawn into the head cavity creating a larger shot volume.

The unit contains an embedded micro-controller and will communicate directly to a host device (Computer or PLC) via a serial port, or Ethernet connection. All parameters, such as volume, speed, number of cycles, are all programmed from the TSi. The host can be disconnected, and the pump will continue its current program.

Rotating & Reciprocating Piston Design

The pump head used in the eVmP system is a rotating and reciprocating ceramic piston design. The ceramic piston and the liner are precision matched sets and the assembly is manufactured to extremely tight tolerances, ensuring the best accuracy and repeatability. This pump design eliminates the need for an external supply and discharge valves. The intake port of the pump is never connected to the discharge port. One of the many attributes of this pump is that it has no valves and has only one moving part, the ceramic piston. This will provide millions of maintenance free cycles (approximately 84,000,000).

The valveless pumping function is accomplished by the synchronous rotation and reciprocation of the ceramic piston in a precisely mated ceramic cylinder liner. One complete piston revolution is required for each suction and discharge cycle, shown below in *Figure 2*.

Figure 2

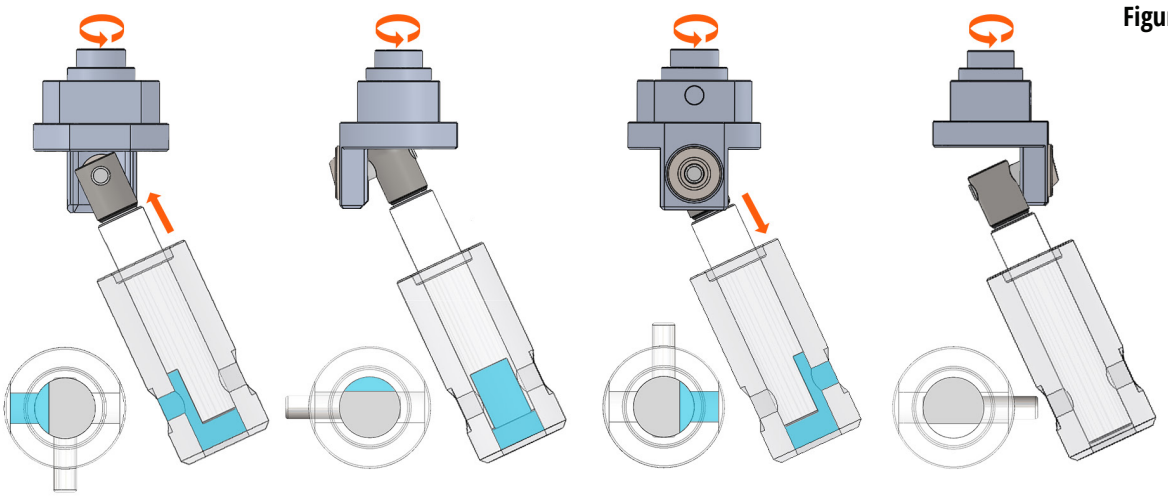

Suction

The piston rotates and reciprocates. As the piston is pulled out of the liner and the piston flat opens to the inlet port, suction is created, and fluid fills the pump chamber.

Crossover

As the piston rotates, the inlet port is sealed with the pump chamber full. As the piston continues to rotate, the outlet port opens up. **Only one port is open at any time, and at no time are both ports interconnected.**

Discharge

Reciprocation continues as the piston flat opens to the outlet port, forcing the piston back into the liner, expelling all of the fluid contained in the pump chamber.

Crossover

Piston rotation continues sealing off the outlet port leaving the pump chamber empty until the flat of the rotating piston opens to the inlet port again.

Features

Ceramic Internals

Durable, long lasting, abrasion resistant.

Valveless Design

Easy to clean, easy to maintain, simple changeover

Electronic Variability

Simple "Push Button" displacement

Positive Displacement

High accuracy and repeatability

(1% accuracy)

Communication Options

EtherNet/IP, RS485, and Digital I/O

Isolation Gland (Washport)

The V6SAN-W and the VSAN-W pump head, which is available for the V-Series eVmP pumps, both have an isolation gland or "washport." As seen in figure 3, this extra port creates a barrier of liquid that isolates the fluid being pumped from the pump head seals and atmosphere.

The VSAN-W pump head Isolated Gland ports works with most 0.25" O.D. (0.17" I.D) tubing. A second pump can be used to cycle isolation fluid through the gland, or a reservoir can be positioned above the Isolated Gland and gravity will feed the isolation fluid through the gland.

Figure 3

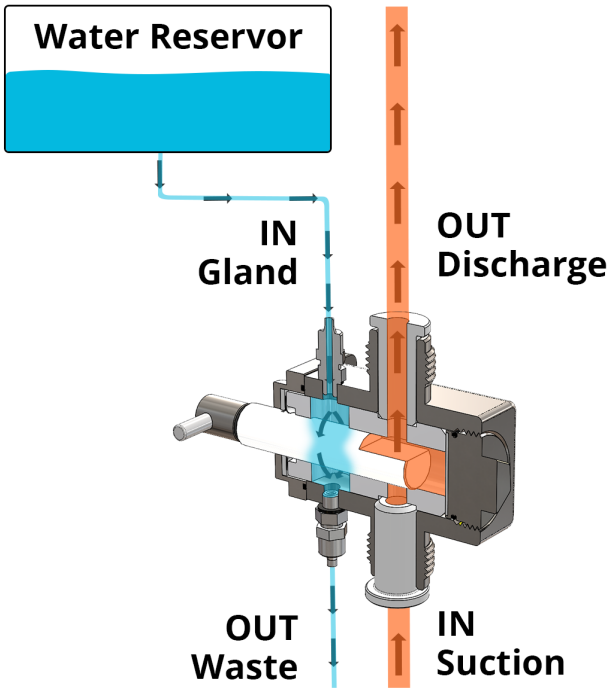

eVmP Configuration Table

Use this table as a guide in deciding which configuration will best suit your application.

Head-Size	Piston Size	Wetted Path Material	Pump Drive	PSIG	Max mL/rev	Max mL/min	RPM*
M0	3/16″	CKC	VMP-OEM-M	100	0.05	50	1,000
M1	1/4″	CKC	VMP-OEM-M	100	0.10	100	1,000
V1	1/4″	SAN	VMP-OEM-V	100	0.32	320	1,000
			VMP-OEM-VS	200	0.32	450	1,500
V2	3/8″	SAN	VMP-OEM-V	100	0.72	720	1,000
			VMP-OEM-VS	200	0.72	1,080	1,500
V3	1/2″	SAN	VMP-OEM-V	100	1.28	1,280	1,000
			VMP-OEM-VS	200	1.28	1,920	1,500
V6	1″	SAN	VMP-OEM-VS10	25	10	6,000	600

***** Speed dependent on viscosity.

Tech Note: Micro (M) pumps can dispense as low as 0.5 µl (microliters).

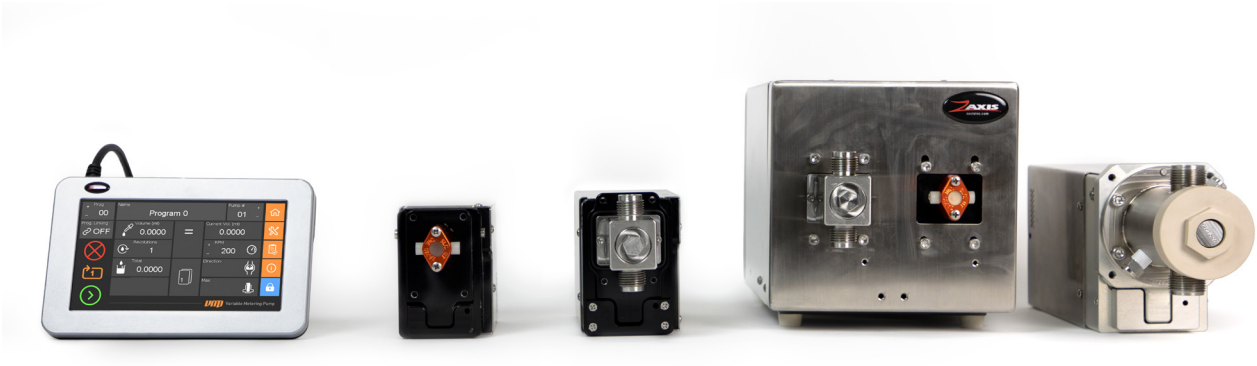

Selecting a Pump

The eVmP family is dynamic and comprehensive. The following information will help you find the ideal eVmP configuration for your application.

1 **Fluid Composition –** Tell us the makeup of the fluid you wish to dispense. What is its viscosity? Is it corrosive? Does it precipitate or crystalize when exposed to atmosphere? Is it abrasive?

2 **Target Dispense –** What is the target metered volume for each dispense? What is the speed at which you would like that volume dispensed?

3 **Production Volume –** What is your target production volume? Is it a desktop application where a single unit will fill your quota? Is it a large array that requires multiple units operating continuously?

4 **Communication –** How would you like to operate the metered dispense system(s)? Options include a single, detachable, touchscreen interface, or networking choices such as Digital I/O or EtherNet/IP.

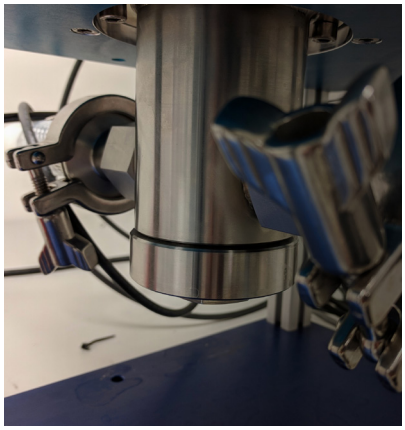

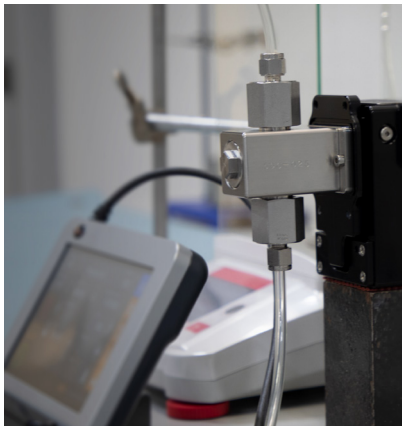

Configuration Form

THIS FORM COLLECTS THE INFORMATION NECESSARY FOR ZAXIS TO CREATE A QUOTE FOR THE IDEAL EVMP CONFIGURATION FOR YOUR APPLICATION.

Volume

Volume Per Dispense _____

Dispenses Per Minute _____

Required Accuracy _____

Required Precision
(Relative Standard Deviation) _____

Fluid

Fluid Being Dispensed _____

Fluid Viscosity _____

Newtonian Fluid ☐ **Non-Newtonian Fluid** ☐

Solids or Precipitates in Fluid _____

Percent of Solids in Fluid _____

Air Sensitivity _____

Is the Fluid Crystal Forming _____

Standard Fluid Temp. _____

Max Fluid Temp. _____

Operation

Communication
EtherNet/IP ☐ Digital I/O ☐
Detachable Touchscreen (TSi) ☐ RS485 ☐

Continuous Duty Cycle ☐ **Alternating Duty Cycle** ☐

Hours Per Day of Run Time _____

Days Per Year of Run Time _____

POWER
BUSY
P1
ZAXIS
Zaxis Inc
801-264-1000
www.zaxisinc.com
VMP PHM
Model: V3SAN-XSS
S/N: 492-XXPH
MECH - 0

Products

Precision Metering Pumps

The patented eVmP system is a precision metering and fluid dispenser combined with a detachable Touch Screen Interface (TSi) for simple programing and immediate teach and control. This pump technology combines precision ceramic pump components and an electronically controlled linear stepper actuator to make ultra-fine adjustments to angle position, thereby changing the volume of metered liquid. This allows the eVmP system to provide dynamic fluid displacement to overcome variations in viscosity and surface tension. The eVmP is the latest in fluid metering and dispense technology.

Microliter Heads

(2.5µL/rev - 100µL/rev)

Designed primarily for ultra-low volume metering and dispensing, providing high precision and accuracy. If you are looking to meter under 100 mL/min or dispense from 2.5 µL to 100 µL per revolution, then the M0 or M1 head is perfect. Standard with low flow, low dead volume, and ¼ -28 female ports. The PVDF (Kynar®) pump body, and the wetted path can be configured for Kynar®, PTFE, and Rulon® AR. **Select the piston size closest to your maximum volume for the best accuracy and precision.**

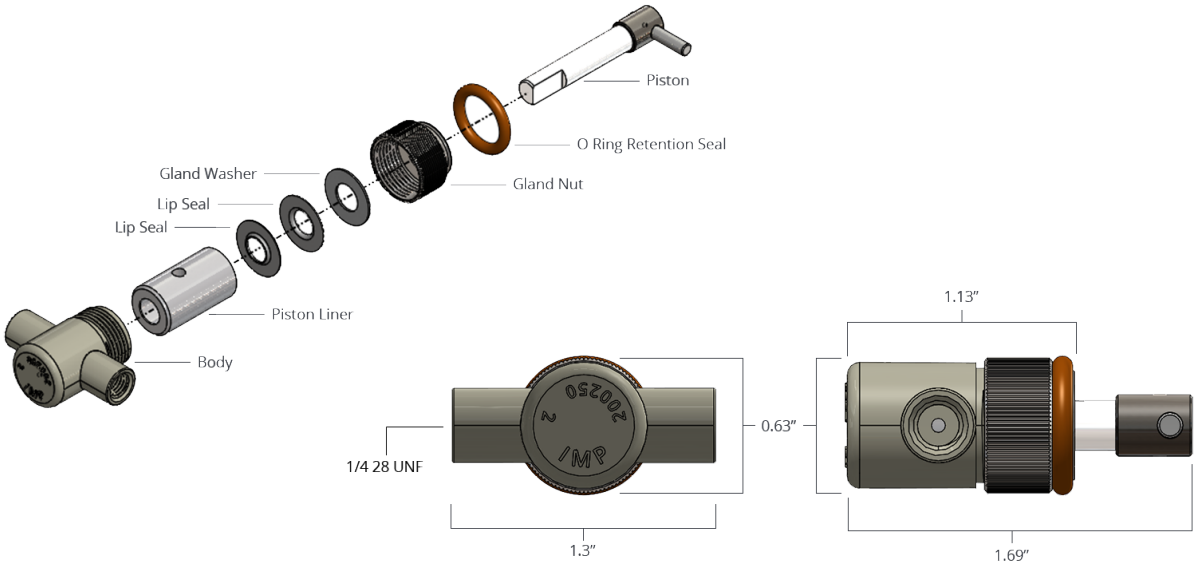

Specifications

Compatible Drive	VMP-OEM-M
Wetted Path Options	Ceramic (Medical grade alumina-oxide), PVDF, Customization Available
Operational Temps	-20ºC – 70ºC, non-condensing
Accuracy & Repeatability	1% +/- Full Scale, 0.5% Coefficient of Variation (CV) Full Scale

M0CKC-LF P/N: 300167

Bore	3/16”
Dispense & Flow Range	Up to 50µL/rev or 5mL/min

M1CKC-LF P/N: 300149

Bore	1/4”
Dispense & Flow Range	Up to 100µL/rev or 10mL/min

Fittings

NOT SURE WHAT PUMP ACCESSORIES YOU NEED? SPEAK TO ONE OF OUR METERING PUMP SPECIALISTS. EMAIL: SERVICE@ZAXISINC.COM OR CALL: 801-264-1000

Tubing Sets with Adapters

Size	Pump Head	Part Number
1/16” NPT	M0CKC-LF, M1CKC-LF	**PN: 300293**
1/8” NPT	M0CKC-LF, M1CKC-LF	**PN: 300256**

M0CKC-LF & M1CKC-LF pump heads are designed with integrated 1/4-28 threaded ports.

The tubing set is made of clear polyurethane with a length of 5m.

Consumables

SEE CONSUMABLE ACCESSORIES ON *PAGE 30* FOR GLAND WASHERS, LIP SEALS, AND O-RINGS. PREVENTITIVE MAINTINENCE KITS CAN BE FOUND ON *PAGE 33*.

Milliliter Heads

(25µL/rev - 1.28mL/rev)

The V-Series pump heads offer industry leading design for ease of disassembly, combined with rugged performance, high precision, and repeatability. If you are looking to meter up to 1920mL/min or dispense down to 25µL, then the V-Series are ideal. The V-Series are constructed with G 1/2 (ISO228), Male Gauge Threads standard, allowing for compression type fittings, which are available in a wide range of imperial and metric sizes. **Select the piston size closest to your maximum volume for the best accuracy and precision.**

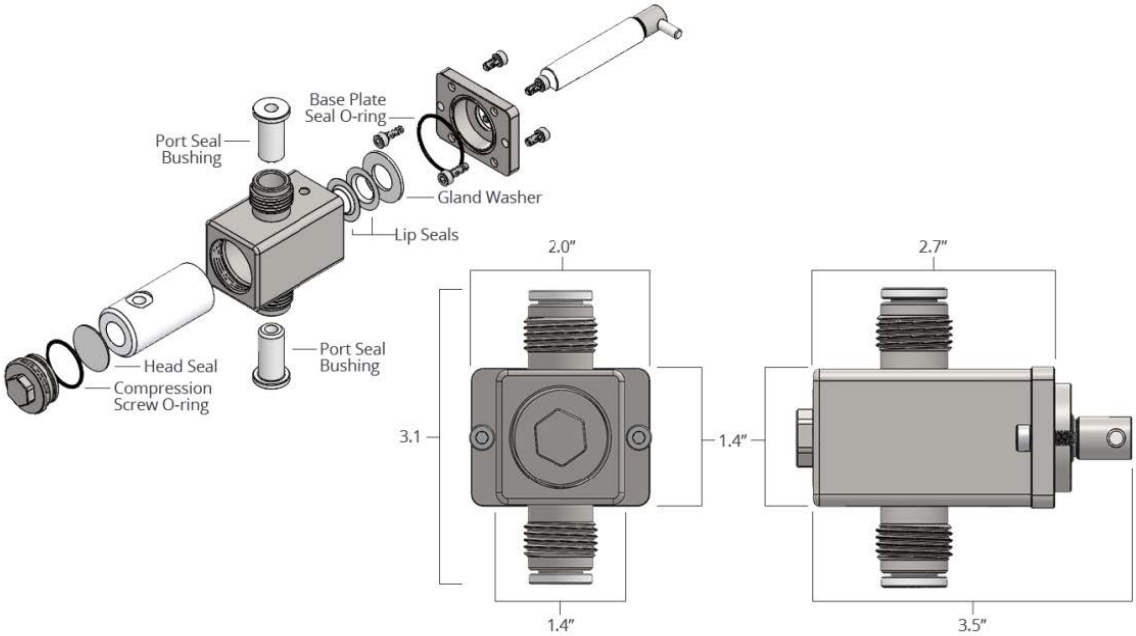

Specifications

Compatible Drive	VMP-OEM-V, VMP-OEM-VS
Wetted Path Options	Ceramic (Medical grade alumina-oxide), 316SS, Customization Available
Operational Temps	-20ºC – 70ºC, non-condensing
Accuracy & Repeatability	1% +/- Full Scale, 0.5% Coefficient of Variation (CV) Full Scale

Regular Head

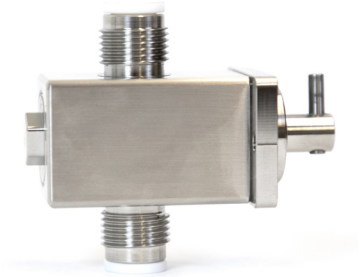

V1SAN P/N: 300074

Bore	1/4″
Dispense & Flow Range	Up to 0.32mL/rev or 450mL/min*

V2SAN P/N: 300075

Bore	3/8″
Dispense & Flow Range	Up to 0.72mL/rev or 1080mL/min*

V3SAN P/N: 300076

Bore	1/2″
Dispense & Flow Range	Up to 1.28mL/rev or 1920mL/min*

Washport Head

V1SAN-W P/N: 300123

Bore	1/4″
Dispense & Flow Range	Up to 0.32mL/rev or 450mL/min*

V2SAN-W P/N: 300128

Bore	3/8″
Dispense & Flow Range	Up to 0.72mL/rev or 1080mL/min*

V3SAN-W P/N: 300131

Bore	1/2″
Dispense & Flow Range	Up to 1.28mL/rev or 1920mL/min*

***** Speed based on VMP-OEM-VS drive and dependent on viscosity.

Fittings

NOT SURE WHAT PUMP ACCESSORIES YOU NEED? SPEAK TO ONE OF OUR METERING PUMP SPECIALISTS.
EMAIL: SERVICE@ZAXISINC.COM OR CALL: 801-264-1000

Quick-Clamp Sanitary Flange for V1SAN, V2SAN, V3SAN, V1SAN-W, V2SAN-W, V3SAN-W

Size	Part Number
1”	**PN: 300310**

Pump Head Bushing Compression Fittings for V1SAN, V2SAN, V3SAN, V1SAN-W, V2SAN-W, V3SAN-W

Material	Thread Size	Part Number
Peek	1/4-28	**PN: 101071**
Peek	G1/4	**PN: 100423**
Peek	G1/8	**PN: 100422**

Stainless Steel Port Compression Fitting for V1SAN, V2SAN, V3SAN, V1SAN-W, V2SAN-W, V3SAN-W

Size	Part Number
3/16” OD Tube	**PN: 100845**
1/4” OD Tube	**PN: 100347**
3/8” OD Tube	**PN: 100256**
1/2” OD Tube	**PN: 100407**
4mm OD Tube	**PN: 100847**
6mm OD Tube	**PN: 100848**
8mm OD Tube	**PN: 100849**
12mm OD Tube	**PN: 100846**

Consumables

SEE CONSUMABLE ACCESSORIES ON *PAGE 30* FOR GLAND WASHERS, LIP SEALS, AND O-RINGS. PREVENTITIVE MAINTINENCE KITS CAN BE FOUND ON *PAGE 33*.

Milliliter Heads

(0.5mL/rev - 10mL/rev)

The V6SAN Pump head offer one of the largest fill volumes per stroke and metering rate in the industry, providing larger flow rates with a valve-less piston design. It features 316SS and PTFE wetted parts, as well as sanitary features such as tri clamp/sanitary fittings designed to meet FDA and 3A standards. Wash glands are optional as well as numerous fitting configurations to meet your application needs.

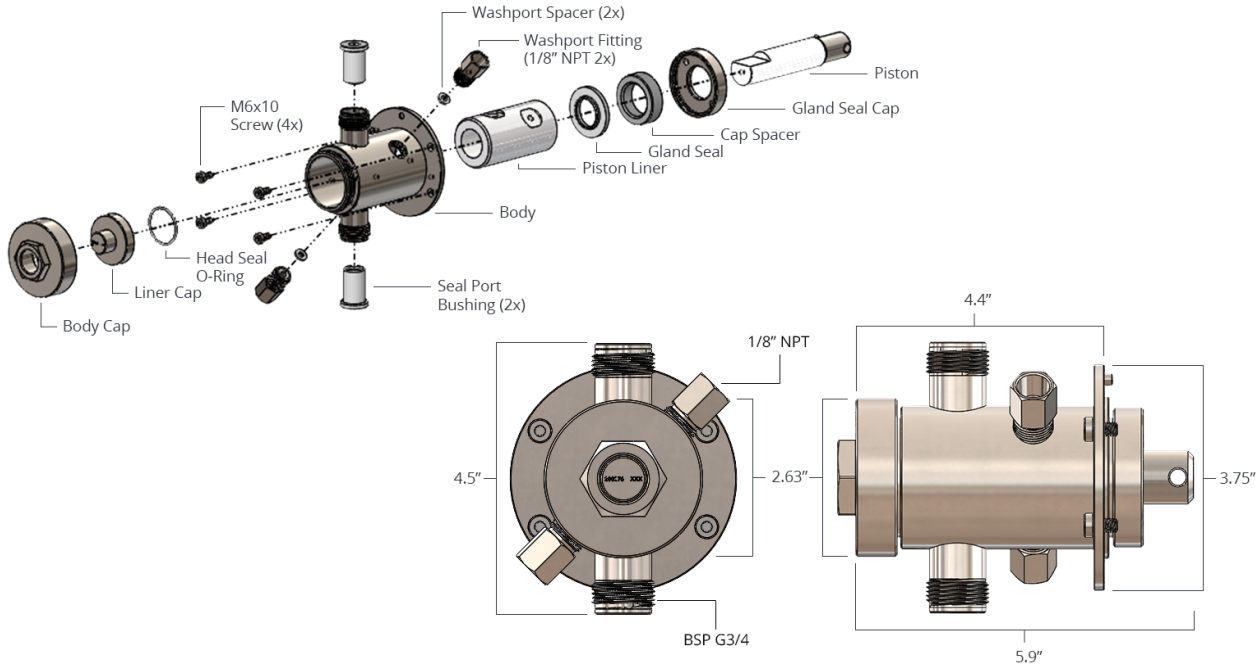

Specifications

Compatible Drive	VMP-OEM-VS10
Wetted Path Options	Ceramic (Medical grade alumina-oxide), 316SS, Customization Available
Operational Temps	-20ºC – 70ºC, non-condensing
Accuracy & Repeatability	1% +/- Full Scale, 0.5% Coefficient of Variation (CV) Full Scale

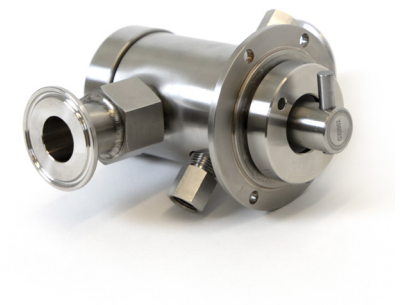

V6SAN-W P/N: 300309

Bore	1”
Dispense & Flow Range	Up to 10mL/rev or 6L/min

The -W in the product name refers to the wash gland feature, also known as an isolation gland. See page 06 for more information on the isolation gland.

Fittings

NOT SURE WHAT PUMP ACCESSORIES YOU NEED? SPEAK TO ONE OF OUR METERING PUMP SPECIALISTS. EMAIL: SERVICE@ZAXISINC.COM OR CALL: 801-264-1000

Washport Fitting for V6SAN-W

Size	Part Number
1/4” NPT	**PN: 101416**

316 Stainless Steel Ferrule Set (1 Front Ferrule/1 Back Ferrule) for 1/4” Tube Fitting. Other sizes available upon request.

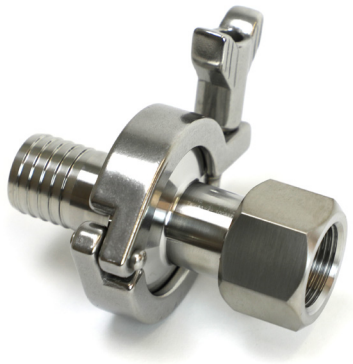

Quick-Clamp Sanitary Flange for V6SAN-W

Size	Part Number
1 1/2”	**PN: 300173**

Adapters for Compression Fittings for V6SAN-W

Material	Thread Size	Part Number
Peek	1/2” NPT	**PN: 200394**
316SS	1/2” NPT	**PN: 200497**
Peek	3/8” NPT	**PN: 200409**
316SS	3/8” NPT	**PN: 200498**

See Compression Fittings (below) for compatible fittings.

Compression Fittings

Adapter Size	Tube Size	Part Number
1/2” NPT	1/4” OD	**PN: 101350**
1/2” NPT	3/8” OD	**PN: 101351**
1/2” NPT	1/2” OD	**PN: 101352**
3/8” NPT	1/4” OD	**PN: 101347**
3/8” NPT	3/8” OD	**PN: 101348**
3/8” NPT	1/2” OD	**PN: 101349**

See Adapters for Compression Fittings (above) for compatible fittings.

Consumables

SEE CONSUMABLE ACCESSORIES ON *PAGE 30* FOR GLAND WASHERS, LIP SEALS, AND O-RINGS. PREVENTITIVE MAINTINENCE KITS CAN BE FOUND ON *PAGE 33*.

VMP-OEM-M (Drive)

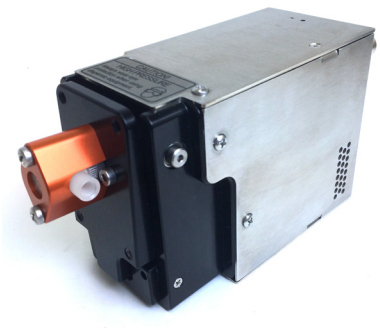

PART NUMBER: 300134

The eVmP Micro is our stepper motor drive, designed for the Micro Series pump heads. Micro Pumps are ideal for neat chemistry, with flow rates under 100 mL/min, and pressure less than 100 PSIG. Each Micro Drive is standard with RS485, PLC I/O, and Ethernet connections.

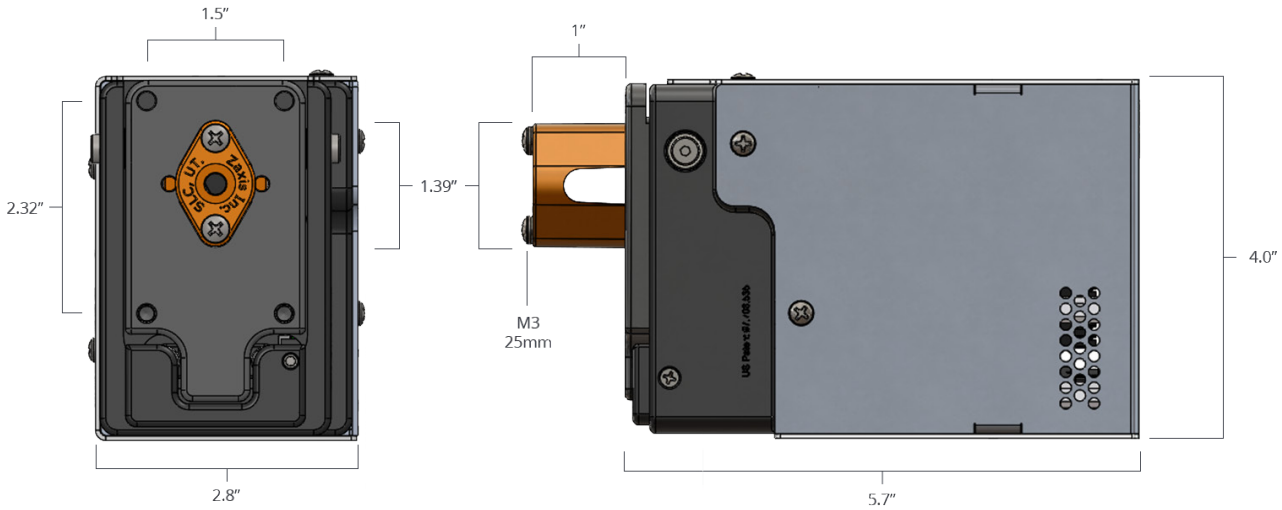

Specifications

Dimensions	2.8" wide, 4" high, 5.7" deep
Compatable Heads	M0, M1
Weight	5lbs (with pump head)
System Power	24VDC 2 Amps
Pressure Range	100PSIG Max
RPM	1000 (Speed dependent on viscosity.)
Operational Types	Continuous Metering, Single/Multiple Dispense, Flow Direction, & Suck Back
Stored Programs	Up to 50
Interface	RS485 1/2 or Full Duplex, Optional EtherNet/IP

VMP-OEM-V (Drive)

PART NUMBER: 300135

The VMP-OEM-V is our stepper–driven motor drive, designed for V series pump heads. VMP-OEM-V Pumps are ideal for a wide range of applications, including neat chemistry, and some slurries, pastes, gels, or creams. Flow rates are typically less than 1000 mL/min, and under 100 PSI, making the V Series one of our most popular pumps. Each VMP-OEM-V Drive is standard with RS485, PLC I/O, and Ethernet connections.

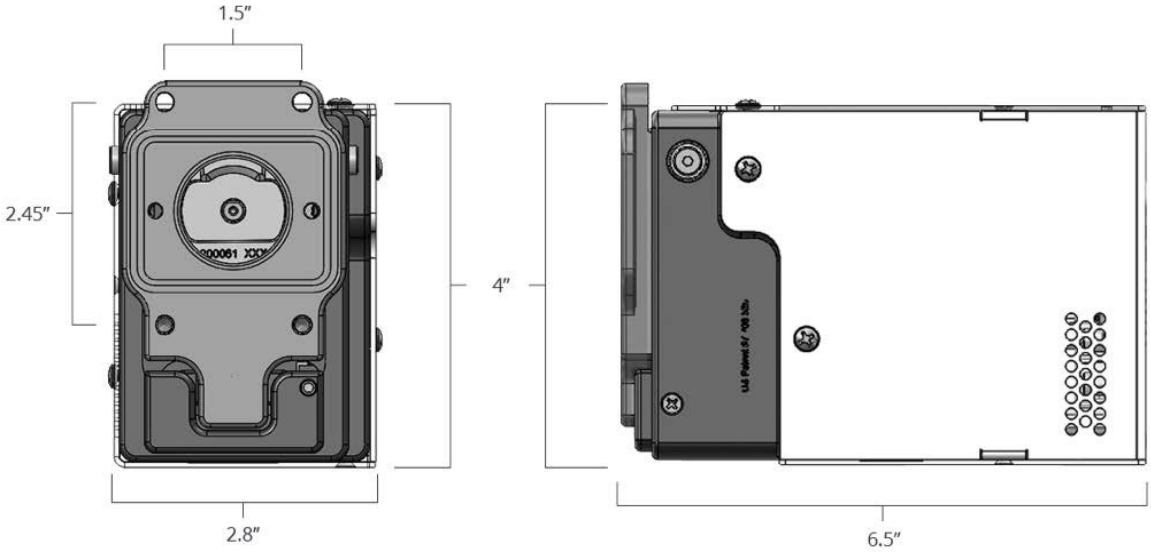

Specifications

Dimensions	2.8" wide, 4" high, 6.5" deep
Compatible Heads	V1, V2, V3
Weight	7lbs (with pump head)
System Power	24/36VDC 2 Amps
Pressure Range	100PSIG Max
RPM	1000 (Speed dependent on viscosity.)
Operational Types	Continuous Metering, Single/Multiple Dispense, Flow Direction, & Suck Back
Stored Programs	Up to 50
Interface	RS485 1/2 or Full Duplex, Optional EtherNet/IP

VMP-OEM-VS (Drive)

PART NUMBER: 300136

The VMP-OEM-VS is our servo–driven motor drive, designed for V series pump heads. The Servo Drive is ideal for more demanding applications with higher flow rates, higher pressure, or higher viscosity applications. With nearly 4 times the torque, the VS series drive can handle flow rates near 2,000 mL/min and back pressure up to 200 psi, while accepting common V series pump heads. Each VMP-OEM-V Drive is standard with RS485, PLC I/O, and Ethernet connections.

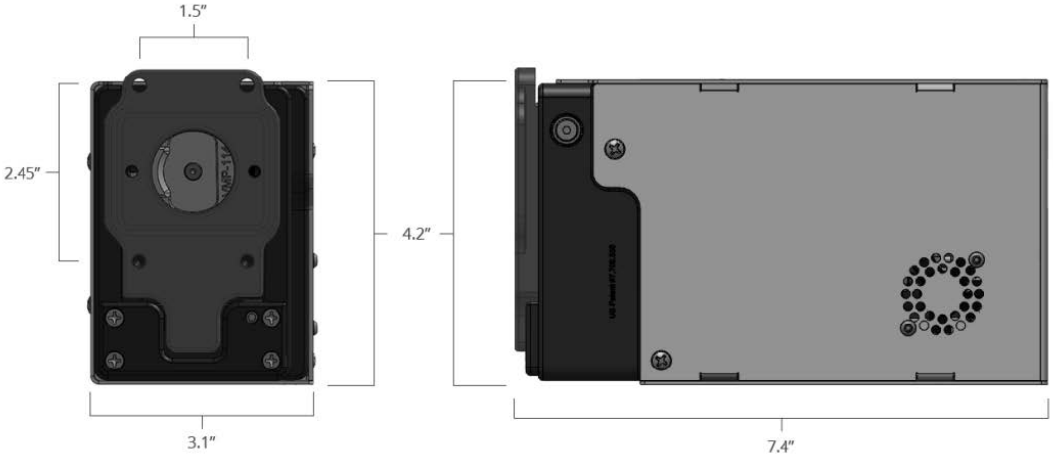

Specifications

Dimensions	3.1" wide, 4.2" high, 7.4" deep
Compatible Heads	V1, V2, V3
Weight	7.5lbs (with pump head)
System Power	24/36VDC 2 Amps
Pressure Range	200PSIG Max
RPM	1,500 (Speed dependent on viscosity.)
Operational Types	Continuous Metering, Single/Multiple Dispense, Flow Direction, & Suck Back
Stored Programs	Up to 50
Interface	RS485 1/2 or Full Duplex, Optional EtherNet/IP

VMP-OEM-VS10 (Drive)

PART NUMBER: 300335

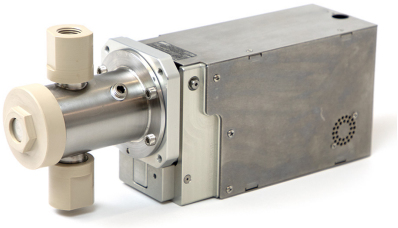

The VMP-OEM-VS10 is our specialty, servo–driven motor drive, designed to accept the V6SAN Pump Head. Using a powerful servo motors and extra-large flow capacity, the VMP-OEM-VS10 can accomplish an amazing 10L/min and nearly 10mL/stroke, at a maximum of 25 PSI. Each VS10 Drive is standard with RS485, PLC I/O, and Ethernet connections.

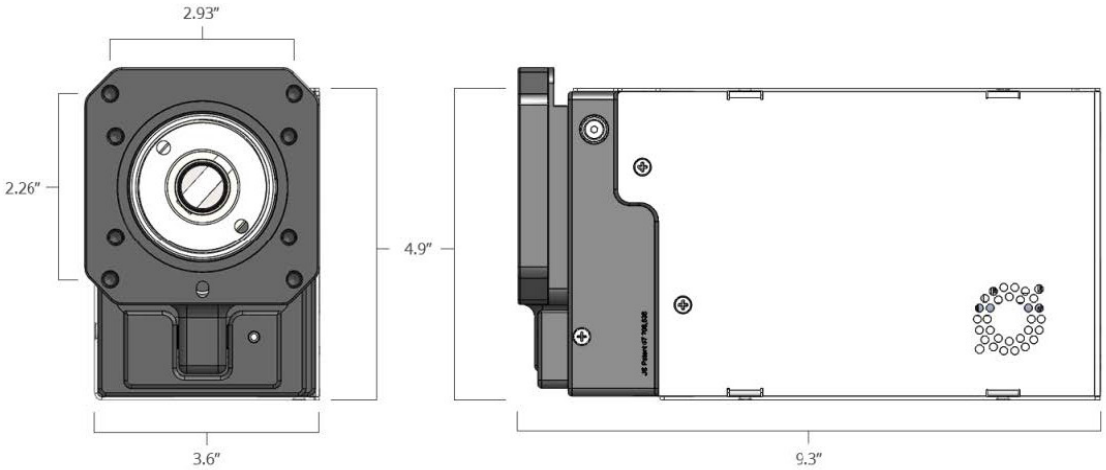

Specifications

Dimensions	3.6” wide, 4.9” high, 9.3” deep
Compatable Heads	V6SAN-W
Weight	18.4lbs (with pump head)
System Power	24VDC 4 Amps (Optional 75VDC 5 Amp)
Pressure Range	25PSIG Max
RPM	600 (Speed dependent on viscosity.)
Operational Types	Continuous Metering, Single/Multiple Dispense, Flow Direction, & Suck Back
Stored Programs	Up to 50
Interface	RS485 1/2 or Full Duplex, Optional EtherNet/IP

2-UP (Enclosure)

VMP2-V PN: 300140
VMP2-VS PN: 300141
Configure 2 eVmP Dispensers in one enclosure. Compatible Drives include the VMP-OEM-V and the VMP-OEM-VS. Compatible Heads include V1SAN, V1SAN-W, V2SAN, V2SAN-W, V3SAN, and V3SAN-W. **Select the piston size closest to your maximum volume for the best accuracy and precision.**

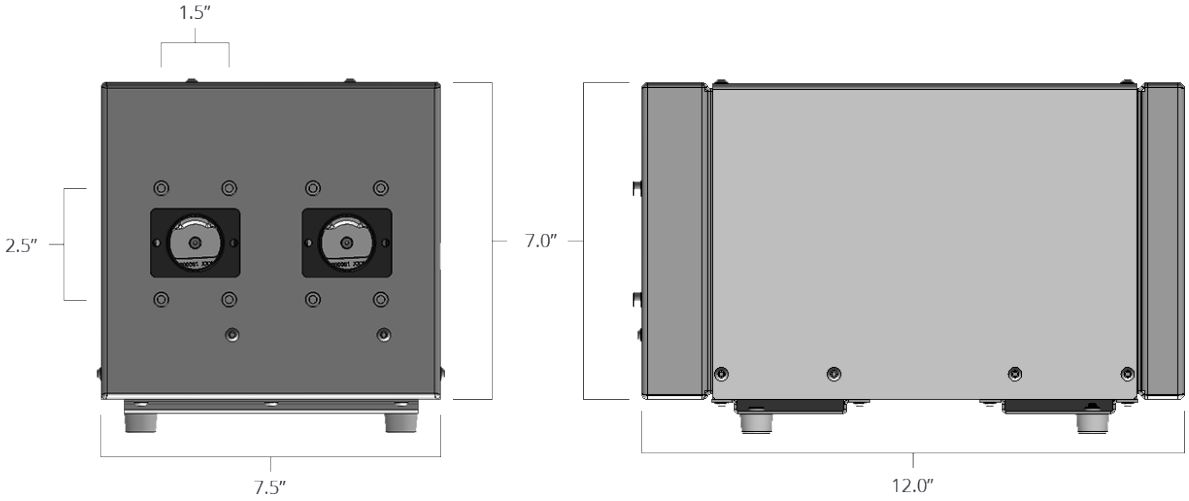

Specifications

Compatible Drives	VMP-OEM-V (PN: 300140), VMP-OEM-VS* (PN: 300141)
Compatible Heads	V1SAN, V1SAN-W, V2SAN, V2SAN-W, V3SAN, V3SAN-W
Dimensions	7.5” wide, 7” high, 12” deep
Weight	12lbs 3oz (enclosure only, no head or drive included)
System Power	120/240 VAC 50/60 Hz
Interface	RS485 1/2 or Full Duplex, Multiple I/O function Configurations, Optional EtherNet/IP

***** VMP-EOM-VS has a limited dispense volume of 1.2mL.

Accessories

Power & Communication

Connecting Pump Power & Communication

Power and communications cables as well as the detachable touchscreen interface.

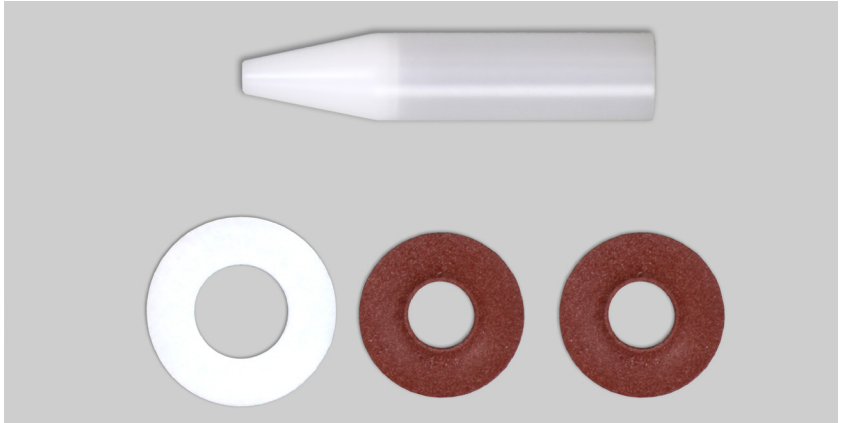

Consumables

Internal Pump Head Components

All wearable internal pump head components, such as gland washers, lip seals, head seals, and O-Rings.

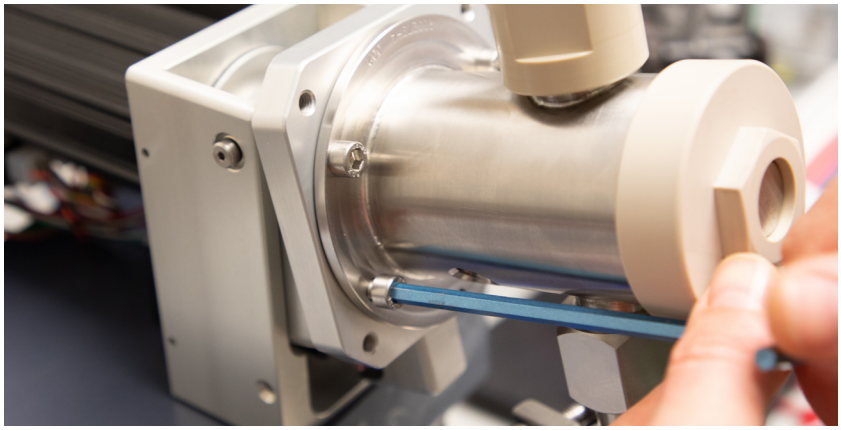

Preventive Maintenance Kits

Internal Pump Head Components

Preventative maintenance kits contain consumable internal pump head components for each eVMP pump head.

Power & Communication Accessories

NOT SURE WHAT PUMP ACCESSORIES YOU NEED? SPEAK TO ONE OF OUR METERING PUMP SPECIALISTS.
EMAIL: SERVICE@ZAXISINC.COM OR CALL: 801-264-1000

Intuitive Interface

Detachable Touchscreen Interface

PN: 300133
The 7" HD Touch Screen Interface (TSi) is designed to communicate, program, and teach up to 32 eVmP Pump Systems over RS485, and includes the communication cable.

Specifications

Dimensions	7.75" wide, 5" high, 1" deep
Weight	1.9lbs
Part Name	Tsi-Vc
Connector	Conncect directly to pump drive via 8 Pin RS485 cable.

Cable - 12 Pin - Right Angle Connector

2m Length PLC	**PN: 100273**
5m Length PLC	**PN: 100277**

The 12 Pin cable is used on eVmP drives to connect PLC power and contains the digital and discrete I/O. The 12 Pin cable delivers the ready, count, busy, and start signals on integrated eVmP pumps.

Cable - 12 Pin - Straight Connector

2m Length PLC	**PN: 100091**
5m Length PLC	**PN: 100267**

The 12 Pin cable is used on eVmP drives to connect PLC power and contains the digital and discrete I/O. The 12 Pin cable delivers the ready, count, busy, and start signals on integrated eVmP pumps.

Connector Assembly

Connector Assembly	**PN: 100856**

Field Connector Assembly can be used to create custom length 8 pin connections. Standard lengths are typically 5 meters or less.

Cable - 8 Pin - Right Angle Connector

2m Length RS485	**PN: 100090**
5m Length RS485	**PN: 100279**

8 Pin cables are utilized on eVmP Pumps for RS485 communication, which allows for daisy chain arrangement of up to 32 eVmP Pumps. From a standard eVmP drive, the 8 Pin cable also is utilized to connect the Touch Screen Interface.

Cable - 8 Pin - Straight Connector

2m Length RS485	**PN: 100089**
5m Length RS485	**PN: 100392**

8 Pin cables are utilized on eVmP Pumps for RS485 communication, which allows for daisy chain arrangement of up to 32 eVmP Pumps. From a standard eVmP drive, the 8 Pin cable also is utilized to connect the Touch Screen Interface (TSi).

Cable - 4 Pin

Straight Connector	**PN: 100855**
Right Angle Connector	**PN: 100181**

Over molded 4 Pin connectors are used to power 2-Up eVmP Pumps, like the VMP2 Series and are available in 5-meter length with straight or right-angle connections.

External Power Supply

Model Compatability	Part Number
VMP-OEM-M, VMP-OEM-V	**PN: 200005**

24-Volt Includes communication cable.

Consumables

TO MAINTAIN PEAK PERFORMANCE OF YOUR EVMP PUMP HEAD, REPLACE ANY CONSUMABLE INTERNAL COMPONENTS WHEN NEEDED.

Pump Head Internals

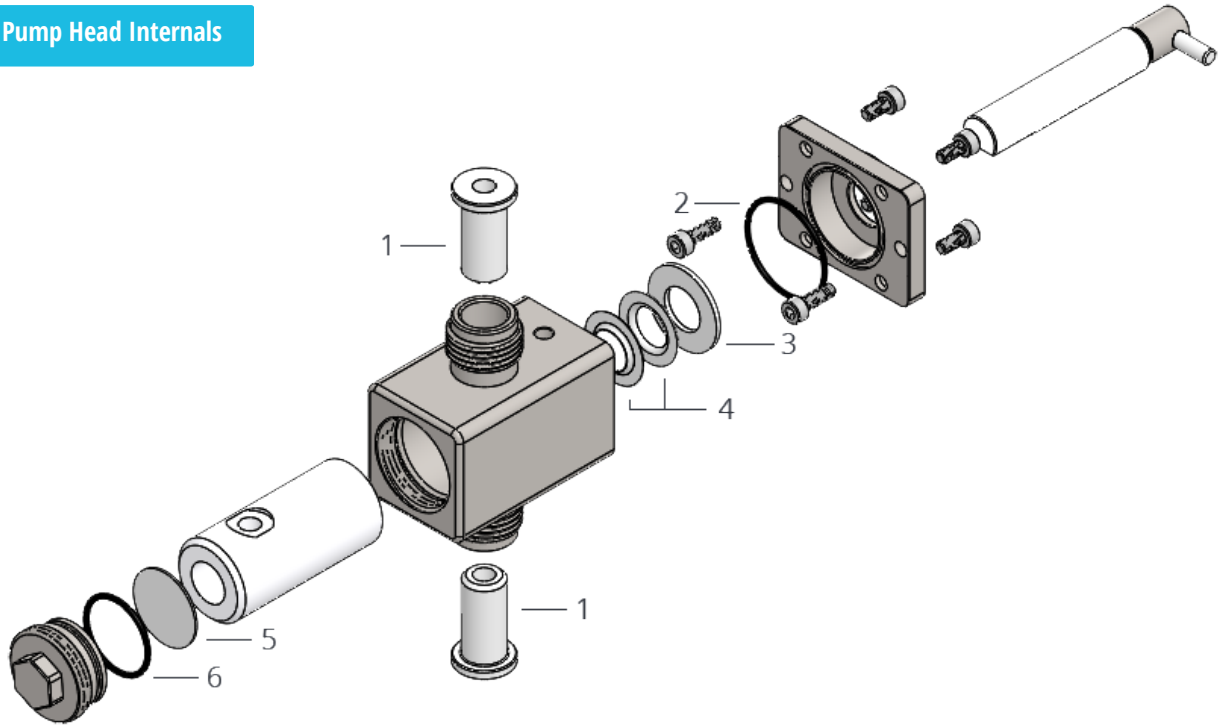

1	**Port Seal Bushing**	Seals to port for smooth flow.
2	**Base Plate Seal O-Ring**	Seals the bottom of the pump.
3	**Gland Washer**	Sets the stack height for the piston.
4	**Lip Seals**	Acts as a wiper to keep piston clear of debris.
5	**Head Seal**	Seals the top of the pump.
6	**Compression Screw O-ring**	Seals compression screw.

Lip Seals (PTFE)

Pump Head	Part Number
V1SAN, V1SAN-W	**PN: 200109**
V2SAN, V2SAN-W	**PN: 200010**
V3SAN, V3SAN-W	**PN: 200090**

PTFE is an FDA approved, chemically inert material with high temperature resistance, making it the perfect material for chemically aggressive applications.

Lip Seals (Rulon®)

Pump Head	Silicone Treated	Part Number
M0CKC-LF	Untreated	**PN: 200560**
M0CKC-LF	Treated	**PN: 200562**
M1CKC-LF	Untreated	**PN: 200254**
M1CKC-LF	Treated	**PN: 200270**

Rulon® is a material in the PTFE family. It has high durability and abrasion resistance as well as a low coefficient of friction. Silicone treated seals are available as an added measure to prevent galling.

Lip Seal Insertion Tool

Pump Head	Size	Part Number
M0CKC-LF, M1CKC-LF, V1SAN, V1SAN-W	1/4”	**PN: 200491**
V2SAN, V2SAN-W	3/8”	**PN: 200492**
V3SAN, V3SAN-W	1/2”	**PN: 200493**

The smooth, tapered design allows for worry free installation of sensitive lip seals.

Gland Washer (PTFE)

Pump Head	Part Number
M0CKC-LF	**PN: 200517**
M1CKC-LF	**PN: 200291**
V1SAN, V1SAN-W	**PN: 200107**
V2SAN, V2SAN-W	**PN: 200108**
V3SAN, V3SAN-W	**PN: 200089**

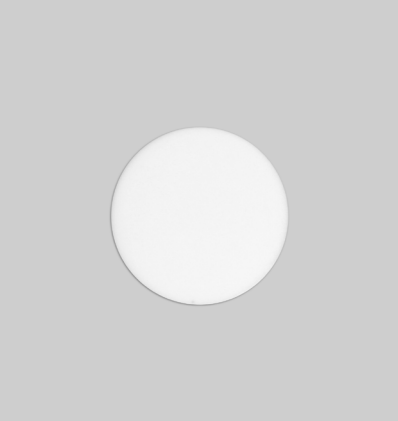

Head Seal

Pump Head	Part Number
V1SAN, V2SAN, V3SAN, V1SAN-W, V2SAN-W, V3SAN-W	**PN: 200075**

O-Rings

Pump Head	Function	Part Number
V1SAN, V2SAN, V3SAN, V1SAN-W, V2SAN-W, V3SAN-W	Base Plate Seal	**PN: 100297**
V1SAN, V2SAN, V3SAN, V1SAN-W, V2SAN-W, V3SAN-W	Compression Screw Seal	**PN: 100298**
V6SAN-W	Head Seal	**PN: 100858**

Port Seal Bushing

Pump Head	Part Number
V1SAN, V2SAN, V3SAN, V1SAN-W, V2SAN-W, V3SAN-W	**PN: 200076**
V6SAN-W	**PN: 200183**

Preventative Maintenance Kits

TO MAINTAIN PEAK PERFORMANCE OF YOUR EVMP PUMP HEAD, REPLACE ANY CONSUMABLE INTERNAL COMPONENTS WHEN NEEDED.

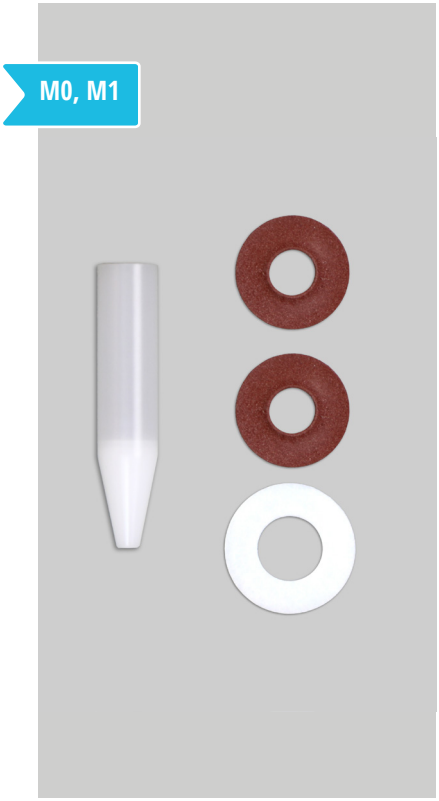

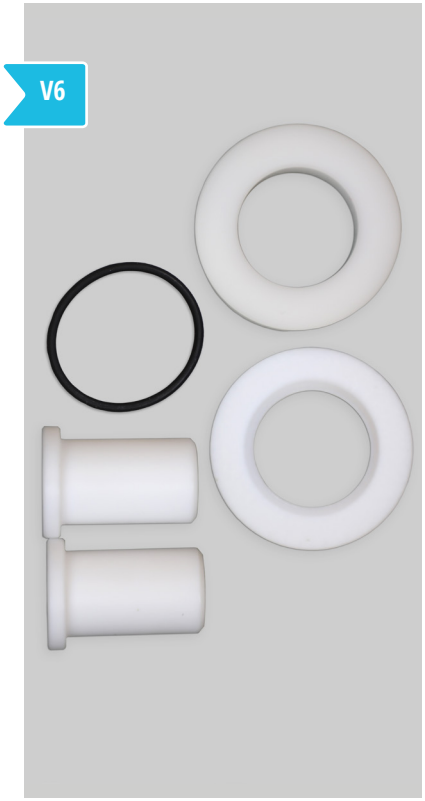

Pump Head	Material	Part Number	Material	Part Number
M0CKC-LF	PTFE	**PN: 300345**	Rulon®	**PN: 300343**
			Rulon®-Silicone Treated	**PN: 300344**
M1CKC-LF	PTFE	**PN: 300347**	Rulon®	**PN: 300346**
			Rulon®-Silicone Treated	**PN: 300348**
V1SAN, V1SAN-W	PTFE	**PN: 300313**		
V2SAN, V2SAN-W	PTFE	**PN: 300314**		
V3SAN, V3SAN-W	PTFE	**PN: 300315**		
V6SAN-W	PTFE	**PN: 300316**		

Service & Support

Custom Fabrication

When a challenging application cannot be solved by our standard products, we utilize our specialized design, manufacturing, and assembly team. This specialized engineering team includes mechanical engineers, electrical engineers, software engineers, machinists, and assemblers. Zaxis Inc. operates in a 20,000 square foot manufacturing facility optimized for developing custom products for challenging applications. We like being challenged by our customers because it provides a natural well for innovation.

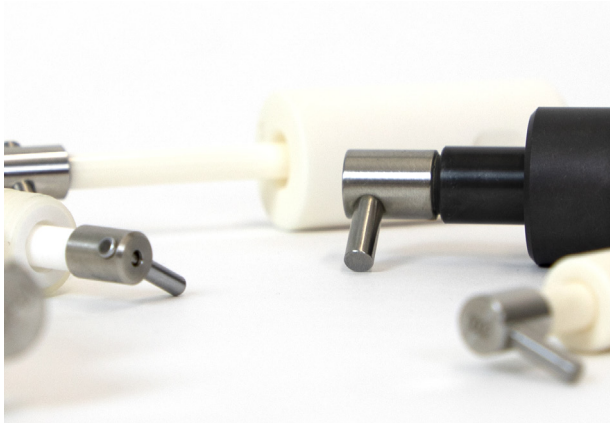

Materials

It is not unusual for Zaxis to work with very specific wetted path requirements, where SAN and CKC components have been substituted with PEEK and even molded solutions for high quantity. Fittings, seals, washers and other material should be verified by the end user and design review by the Engineering Team at Zaxis.

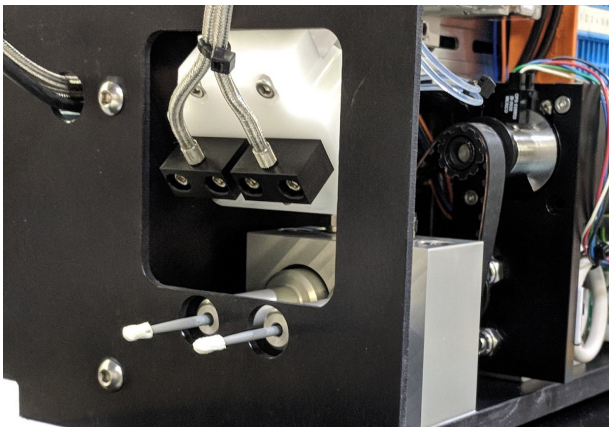

Fixtures

Your eVmP pump may require that little extra something to complete a benchtop trial or design of experiments, for example Zaxis can design custom nozzles, reservoirs, tubing sets and mounting stands to help complete your project. Custom fixtures are inherent in our culture to provide the best of multiple pump and one-off pump solutions.

Returns for Repair/Service

All Zaxis pump drives and pump heads can be returned for repair/service, with written return merchandise authorization (RMA). The standard labor/evaluation for pump heads includes new seals, washers, and flow rate verification. Zaxis pump drive service/evaluation includes factory calibration, and a 12-month NIST traceable certificate.

Contact Information

Phone: 1.801.264.1000

Email: support@zaxisinc.com

Address: 2442 South 2570 West
Salt Lake City, UT 84119

Website: zaxisinc.com

Warranty

ONE YEAR LIMITED WARRANTY

ZAXIS INC. products are manufactured to a high level of mechanical precision from materials that are resistant to attack by many corrosive chemicals. These products, however, may be self-destructive when used with non-compatible fluids or when located in physically hostile environments or when operated under non-specification voltage or pressure conditions.

ZAXIS INC., therefore, warrants only as follows:
Each metering head has been tested with water to rated pressure prior to shipment from the factory. The qualifying performance of each metering head is recorded by serial number in a permanent record of the company. If at any time with-in the first year after any ZAXIS INC. product has been shipped to a customer (user), it fails to perform according to ZAXIS INC. literature, the product, with written explanation of the problem, may be returned, freight prepaid, to ZAXIS INC. for examination, repair or replacement at ZAXIS INC. expense (labor and material). All such returns must have prior ZAXIS INC. customer service authorization before returning. If, upon examination, ZAXIS INC. determines that abusive practices, non-compatible fluids or destructive environment of operation or a combination of these factors is responsible for improper performance of the product, all labor and materials costs involved shall be at the expense of the customer.

ZAXIS INC. is not liable for special, indirect or consequential damages that may result from use, failure or malfunction of the product, and any recovery against ZAXIS INC. may not be greater than the purchase price paid for the product.

No person is authorized to change the terms of this warranty.

Terms & Conditions

Zaxis eVmP Pump Standards and Prices

Zaxis products are quoted, sold, and certified to only comply with Zaxis specifications. Only Zaxis is authorized to modify product claims or specifications and are subject to change without notice. Zaxis prices are subject to change without notice. Quotations are valid for thirty (30) days, unless otherwise noted.

Payment Terms

USA Sale: Zaxis standard payment terms are 50% down with PO, balance Net 30.
International Sales: Cash in Advance
Credit Cards Accepted: VISA/Master Card, DISCOVER, and American Express are accepted with a 3% processing fee.

All Bank charges related to wire transfers and ACH payments are the responsibility of the customer.

Orders and Freight

Zaxis orders are non-cancellable and will be shipped per Zaxis acknowledgement. Zaxis is not responsible for delays beyond our control; such as delays from vendors, labor disputes, or military/government action.

All orders are delivered Ex Works, Zaxis Inc. factory, West Valley City, UT, at which time ownership and responsibility, including risk of loss shall pass to the customer.

All specialty packaging and insurance is the responsibility of the customer. Any claims for damaged items should be made with customer's delivering carrier, and or insurance company.

For any prepaid and add shipments, Zaxis will use UPS Ground, and customer must provide detailed insurance information.

Returns for Credit

Standard Zaxis pumps can be returned in most circumstances, and must be returned unopened, unused, and in original Zaxis packaging, within 30 days. All said returned items, must have Zaxis return authorization, (Case#). A restock fee of 10% of original invoice prices will be incurred.

Returns for Repair/Service

All Zaxis pump drives and pump heads can be returned for repair/service, with written return authorization (case#). The standard labor/evaluation includes new seals, washers, and flow rate verification. Zaxis pump drive service/evaluation includes factory calibration, 12month NIST traceable certificate.

If returning a Zaxis pump head, please clean completely with water or isopropyl alcohol IPA > 70% and send copy of applicable MSDS for material last pumped.

For service please contact service@zaxisinc.com.

Notes:

Notes:

2442 South 2570 West
Salt Lake City, UT 84119
+1.801.264.1000
zaxisinc.com